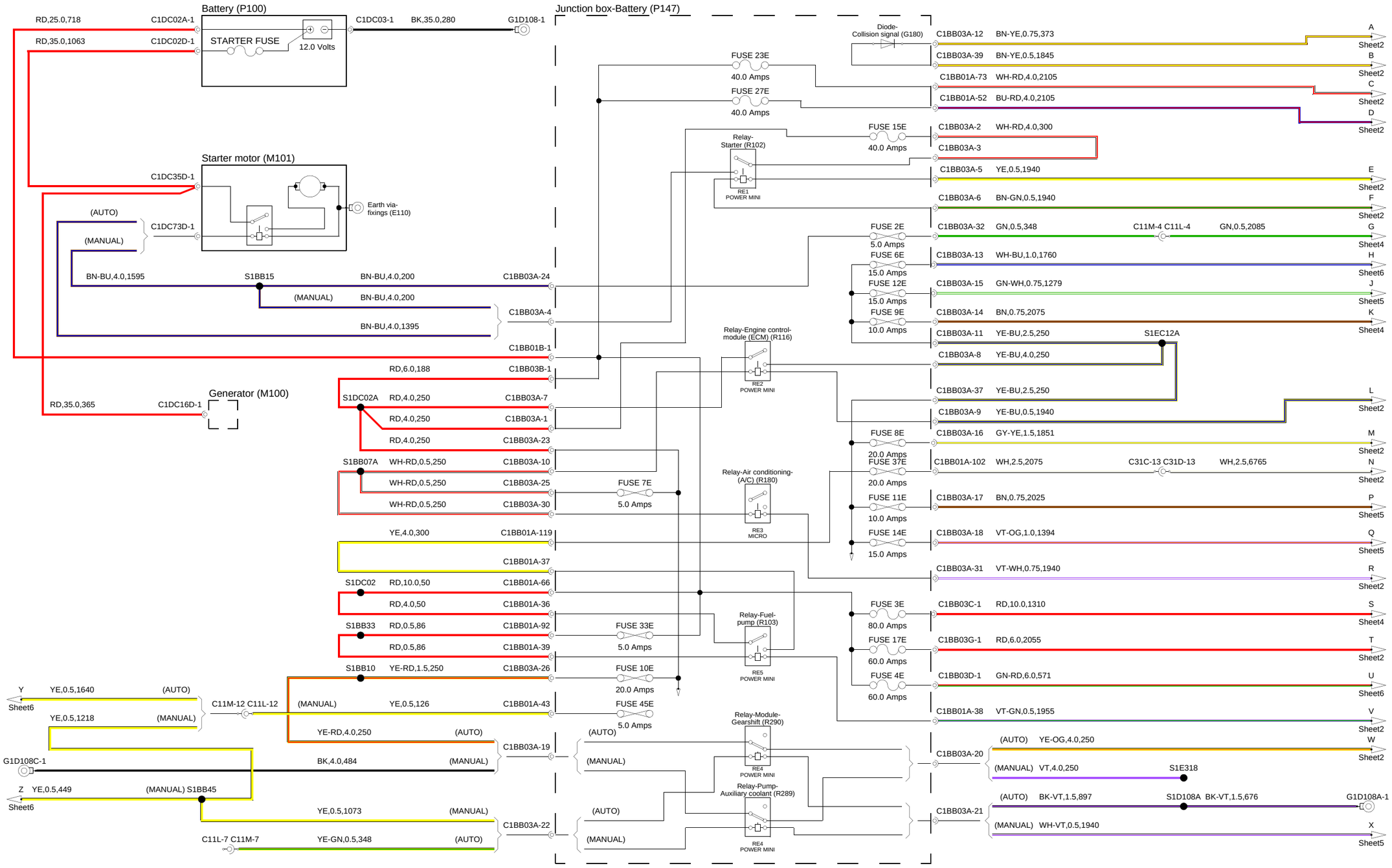
Battery (P100)
STARTER FUSE
12.0 Volts
Junction box-Battery (P147)
Starter motor (M101)
Earth via-fixings (E110)
Generator (M100)
Diode-Collision signal (G180)
FUSE 23E
40.0 Amps
FUSE 27E
40.0 Amps
FUSE 15E
40.0 Amps
Relay-Starter (R102)
RE1 POWER MINI
FUSE 2E
5.0 Amps
FUSE 6E
15.0 Amps
FUSE 12E
15.0 Amps
FUSE 9E
10.0 Amps
Relay-Engine control-module (ECM) (R116)
RE2 POWER MINI
FUSE 8E
20.0 Amps
FUSE 37E
20.0 Amps
FUSE 11E
10.0 Amps
FUSE 14E
15.0 Amps
Relay-Air conditioning-(A/C) (R180)
RE3 MICRO
FUSE 7E
5.0 Amps
FUSE 3E
80.0 Amps
FUSE 17E
60.0 Amps
FUSE 4E
60.0 Amps
Relay-Fuel-pump (R103)
RE5 POWER MINI
FUSE 33E
5.0 Amps
FUSE 10E
20.0 Amps
FUSE 45E
5.0 Amps
Relay-Module-Gearshift (R290)
RE4 POWER MINI
Relay-Pump-Auxiliary coolant (R289)
RE4 POWER MINI
RD,25.0,718 C1DC02A-1
RD,35.0,1063 C1DC02D-1
C1DC03-1 BK,35.0,280 G1D108-1
C1DC35D-1
(AUTO)
(MANUAL)
C1DC73D-1
BN-BU,4.0,1595 S1BB15 BN-BU,4.0,200 C1BB03A-24
(MANUAL) BN-BU,4.0,200
C1BB03A-4
BN-BU,4.0,1395
C1BB01B-1
RD,6.0,188 C1BB03B-1
RD,35.0,365 C1DC16D-1
S1DC02A RD,4.0,250 C1BB03A-7
RD,4.0,250 C1BB03A-1
RD,4.0,250 C1BB03A-23
S1BB07A WH-RD,0.5,250 C1BB03A-10
WH-RD,0.5,250 C1BB03A-25
WH-RD,0.5,250 C1BB03A-30
YE,4.0,300 C1BB01A-119
C1BB01A-37
S1DC02 RD,10.0,50 C1BB01A-66
RD,4.0,50 C1BB01A-36
S1BB33 RD,0.5,86 C1BB01A-92
RD,0.5,86 C1BB01A-39
S1BB10 YE-RD,1.5,250 C1BB03A-26
(MANUAL) YE,0.5,126 C1BB01A-43
Y YE,0.5,1640 (AUTO)
Sheet6
YE,0.5,1218 (MANUAL)
C11M-12 C11L-12
YE-RD,4.0,250 (AUTO)
C1BB03A-19
G1D108C-1
BK,4.0,484 (MANUAL)
Z YE,0.5,449 (MANUAL) S1BB45
Sheet6
YE,0.5,1073 (MANUAL)
C1BB03A-22
C11L-7 C11M-7 YE-GN,0.5,348 (AUTO)
(AUTO)
(MANUAL)
C1BB03A-12 BN-YE,0.75,373
C1BB03A-39 BN-YE,0.5,1845
C1BB01A-73 WH-RD,4.0,2105
C1BB01A-52 BU-RD,4.0,2105
C1BB03A-2 WH-RD,4.0,300
C1BB03A-3
C1BB03A-5 YE,0.5,1940
C1BB03A-6 BN-GN,0.5,1940
C1BB03A-32 GN,0.5,348 C11M-4 C11L-4 GN,0.5,2085
C1BB03A-13 WH-BU,1.0,1760
C1BB03A-15 GN-WH,0.75,1279
C1BB03A-14 BN,0.75,2075
C1BB03A-11 YE-BU,2.5,250 S1EC12A
C1BB03A-8 YE-BU,4.0,250
C1BB03A-37 YE-BU,2.5,250
C1BB03A-9 YE-BU,0.5,1940
C1BB03A-16 GY-YE,1.5,1851
C1BB01A-102 WH,2.5,2075 C31C-13 C31D-13 WH,2.5,6765
C1BB03A-17 BN,0.75,2025
C1BB03A-18 VT-OG,1.0,1394
C1BB03A-31 VT-WH,0.75,1940
C1BB03C-1 RD,10.0,1310
C1BB03G-1 RD,6.0,2055
C1BB03D-1 GN-RD,6.0,571
C1BB01A-38 VT-GN,0.5,1955
C1BB03A-20
(AUTO) YE-OG,4.0,250
(MANUAL) VT,4.0,250 S1E318
C1BB03A-21
(AUTO) BK-VT,1.5,897 S1D108A BK-VT,1.5,676 G1D108A-1
(MANUAL) WH-VT,0.5,1940
A Sheet2
B Sheet2
C Sheet2
D Sheet2
E Sheet2
F Sheet2
G Sheet4
H Sheet6
J Sheet5
K Sheet4
L Sheet2
M Sheet2
N Sheet2
P Sheet5
Q Sheet5
R Sheet2
S Sheet4
T Sheet2
U Sheet6
V Sheet2
W Sheet2
X Sheet5

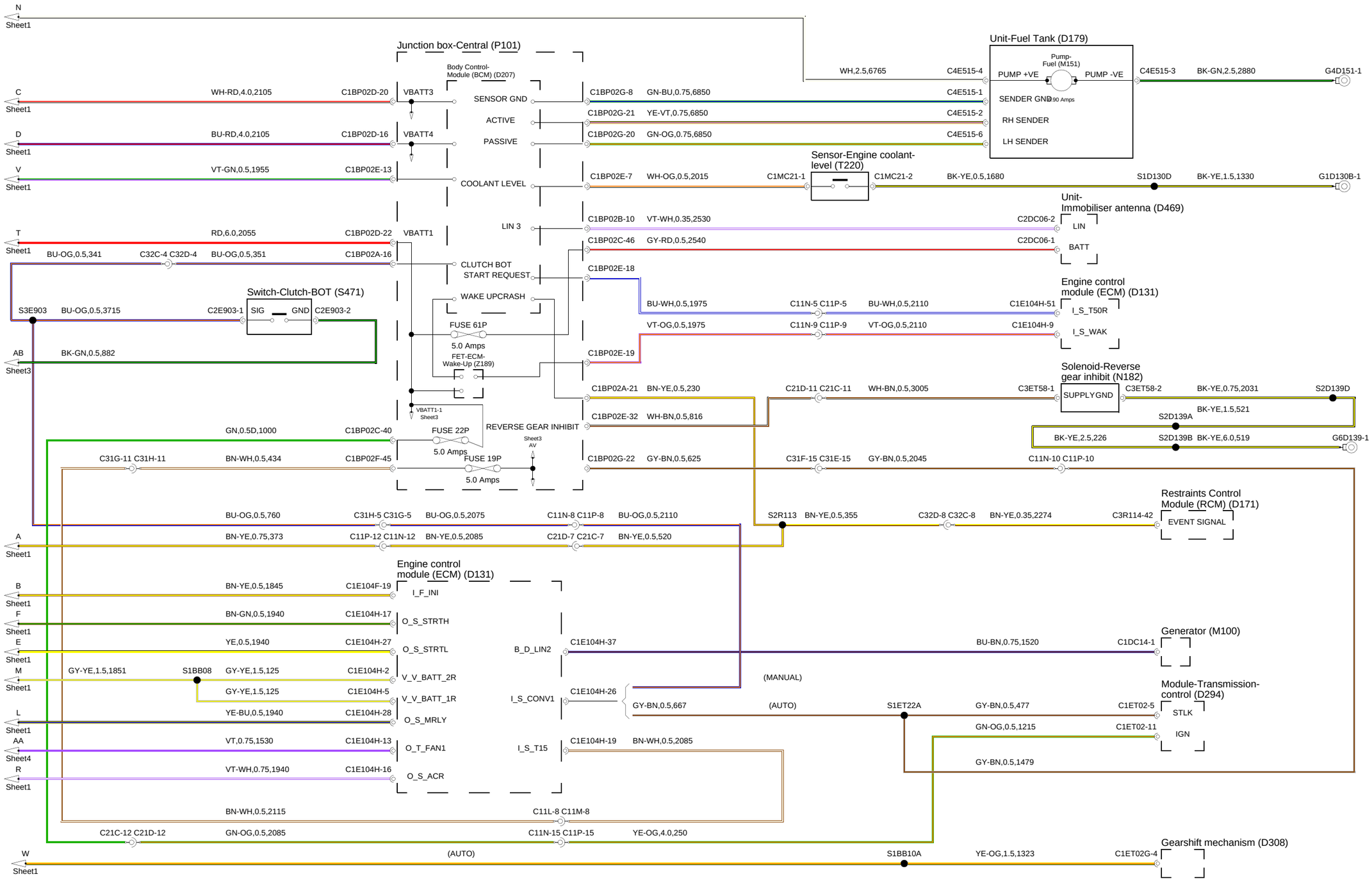
N
Sheet1
Junction box-Central (P101)
Body Control-Module (BCM) (D207)
Unit-Fuel Tank (D179)
Pump-Fuel (M151)
PUMP +VE
PUMP -VE
SENDER GND
90 Amps
RH SENDER
LH SENDER
WH,2.5,6765
C4E515-4
C4E515-3
BK-GN,2.5,2880
G4D151-1
C
Sheet1
WH-RD,4.0,2105
C1BP02D-20
VBATT3
SENSOR GND
C1BP02G-8
GN-BU,0.75,6850
C4E515-1
ACTIVE
C1BP02G-21
YE-VT,0.75,6850
C4E515-2
D
Sheet1
BU-RD,4.0,2105
C1BP02D-16
VBATT4
PASSIVE
C1BP02G-20
GN-OG,0.75,6850
C4E515-6
Sensor-Engine coolant-level (T220)
V
Sheet1
VT-GN,0.5,1955
C1BP02E-13
COOLANT LEVEL
C1BP02E-7
WH-OG,0.5,2015
C1MC21-1
C1MC21-2
BK-YE,0.5,1680
S1D130D
BK-YE,1.5,1330
G1D130B-1
Unit-Immobiliser antenna (D469)
LIN 3
C1BP02B-10
VT-WH,0.35,2530
C2DC06-2
LIN
T
Sheet1
RD,6.0,2055
C1BP02D-22
VBATT1
C1BP02C-46
GY-RD,0.5,2540
C2DC06-1
BATT
BU-OG,0.5,341
C32C-4 C32D-4
BU-OG,0.5,351
C1BP02A-16
CLUTCH BOT START REQUEST
C1BP02E-18
Switch-Clutch-BOT (S471)
WAKE UPCRASH
Engine control module (ECM) (D131)
S3E903
BU-OG,0.5,3715
C2E903-1
SIG
GND
C2E903-2
BU-WH,0.5,1975
C11N-5 C11P-5
BU-WH,0.5,2110
C1E104H-51
I_S_T50R
FUSE 61P
5.0 Amps
VT-OG,0.5,1975
C11N-9 C11P-9
VT-OG,0.5,2110
C1E104H-9
I_S_WAK
AB
Sheet3
BK-GN,0.5,882
FET-ECM-Wake-Up (Z189)
C1BP02E-19
Solenoid-Reverse gear inhibit (N182)
C1BP02A-21
BN-YE,0.5,230
C21D-11 C21C-11
WH-BN,0.5,3005
C3ET58-1
SUPPLY
GND
C3ET58-2
BK-YE,0.75,2031
S2D139D
VBATT1-1
Sheet3
C1BP02E-32
WH-BN,0.5,816
BK-YE,1.5,521
S2D139A
GN,0.5D,1000
C1BP02C-40
FUSE 22P
REVERSE GEAR INHIBIT
Sheet3
AV
BK-YE,2.5,226
S2D139B
BK-YE,6.0,519
G6D139-1
5.0 Amps
C31G-11 C31H-11
BN-WH,0.5,434
C1BP02F-45
FUSE 19P
5.0 Amps
C1BP02G-22
GY-BN,0.5,625
C31F-15 C31E-15
GY-BN,0.5,2045
C11N-10 C11P-10
Restraints Control Module (RCM) (D171)
BU-OG,0.5,760
C31H-5 C31G-5
BU-OG,0.5,2075
C11N-8 C11P-8
BU-OG,0.5,2110
S2R113
BN-YE,0.5,355
C32D-8 C32C-8
BN-YE,0.35,2274
C3R114-42
EVENT SIGNAL
A
Sheet1
BN-YE,0.75,373
C11P-12 C11N-12
BN-YE,0.5,2085
C21D-7 C21C-7
BN-YE,0.5,520
Engine control module (ECM) (D131)
B
Sheet1
BN-YE,0.5,1845
C1E104F-19
I_F_INI
F
Sheet1
BN-GN,0.5,1940
C1E104H-17
O_S_STRTH
E
Sheet1
YE,0.5,1940
C1E104H-27
O_S_STRTL
B_D_LIN2
C1E104H-37
BU-BN,0.75,1520
C1DC14-1
Generator (M100)
M
Sheet1
GY-YE,1.5,1851
S1BB08
GY-YE,1.5,125
C1E104H-2
V_V_BATT_2R
(MANUAL)
GY-YE,1.5,125
C1E104H-5
V_V_BATT_1R
I_S_CONV1
C1E104H-26
Module-Transmission-control (D294)
L
Sheet1
YE-BU,0.5,1940
C1E104H-28
O_S_MRLY
GY-BN,0.5,667
(AUTO)
S1ET22A
GY-BN,0.5,477
C1ET02-5
STLK
AA
Sheet4
VT,0.75,1530
C1E104H-13
O_T_FAN1
I_S_T15
C1E104H-19
BN-WH,0.5,2085
GN-OG,0.5,1215
C1ET02-11
IGN
R
Sheet1
VT-WH,0.75,1940
C1E104H-16
O_S_ACR
GY-BN,0.5,1479
BN-WH,0.5,2115
C11L-8 C11M-8
C21C-12 C21D-12
GN-OG,0.5,2085
C11N-15 C11P-15
YE-OG,4.0,250
Gearshift mechanism (D308)
W
Sheet1
(AUTO)
S1BB10A
YE-OG,1.5,1323
C1ET02G-4

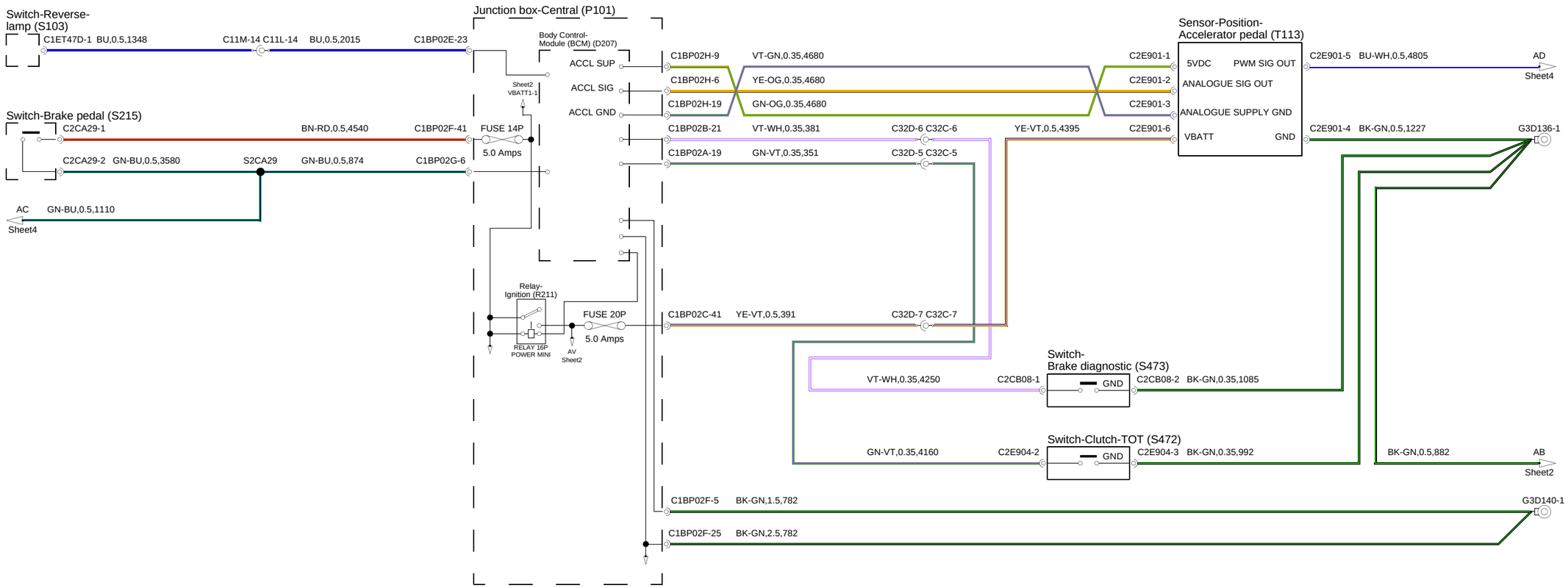
Switch-Reverse-lamp (S103)
C1ET47D-1 BU,0.5,1348
C11M-14 C11L-14 BU,0.5,2015
C1BP02E-23
Junction box-Central (P101)
Body Control-Module (BCM) (D207)
Sheet2 VBATT1-1
Switch-Brake pedal (S215)
C2CA29-1
BN-RD,0.5,4540
C1BP02F-41
FUSE 14P
5.0 Amps
C2CA29-2 GN-BU,0.5,3580
S2CA29
GN-BU,0.5,874
C1BP02G-6
AC
GN-BU,0.5,1110
Sheet4
ACCL SUP
ACCL SIG
ACCL GND
C1BP02H-9
VT-GN,0.35,4680
C1BP02H-6
YE-OG,0.35,4680
C1BP02H-19
GN-OG,0.35,4680
C1BP02B-21
VT-WH,0.35,381
C32D-6 C32C-6
YE-VT,0.5,4395
C1BP02A-19
GN-VT,0.35,351
C32D-5 C32C-5
Sensor-Position-Accelerator pedal (T113)
C2E901-1
C2E901-2
C2E901-3
C2E901-6
5VDC
PWM SIG OUT
ANALOGUE SIG OUT
ANALOGUE SUPPLY GND
VBATT
GND
C2E901-5 BU-WH,0.5,4805
AD
Sheet4
C2E901-4 BK-GN,0.5,1227
G3D136-1
Relay-Ignition (R211)
RELAY 16P POWER MINI
FUSE 20P
5.0 Amps
AV Sheet2
C1BP02C-41
YE-VT,0.5,391
C32D-7 C32C-7
Switch-Brake diagnostic (S473)
VT-WH,0.35,4250
C2CB08-1
GND
C2CB08-2 BK-GN,0.35,1085
Switch-Clutch-TOT (S472)
GN-VT,0.35,4160
C2E904-2
GND
C2E904-3 BK-GN,0.35,992
BK-GN,0.5,882
AB
Sheet2
C1BP02F-5 BK-GN,1.5,782
G3D140-1
C1BP02F-25 BK-GN,2.5,782

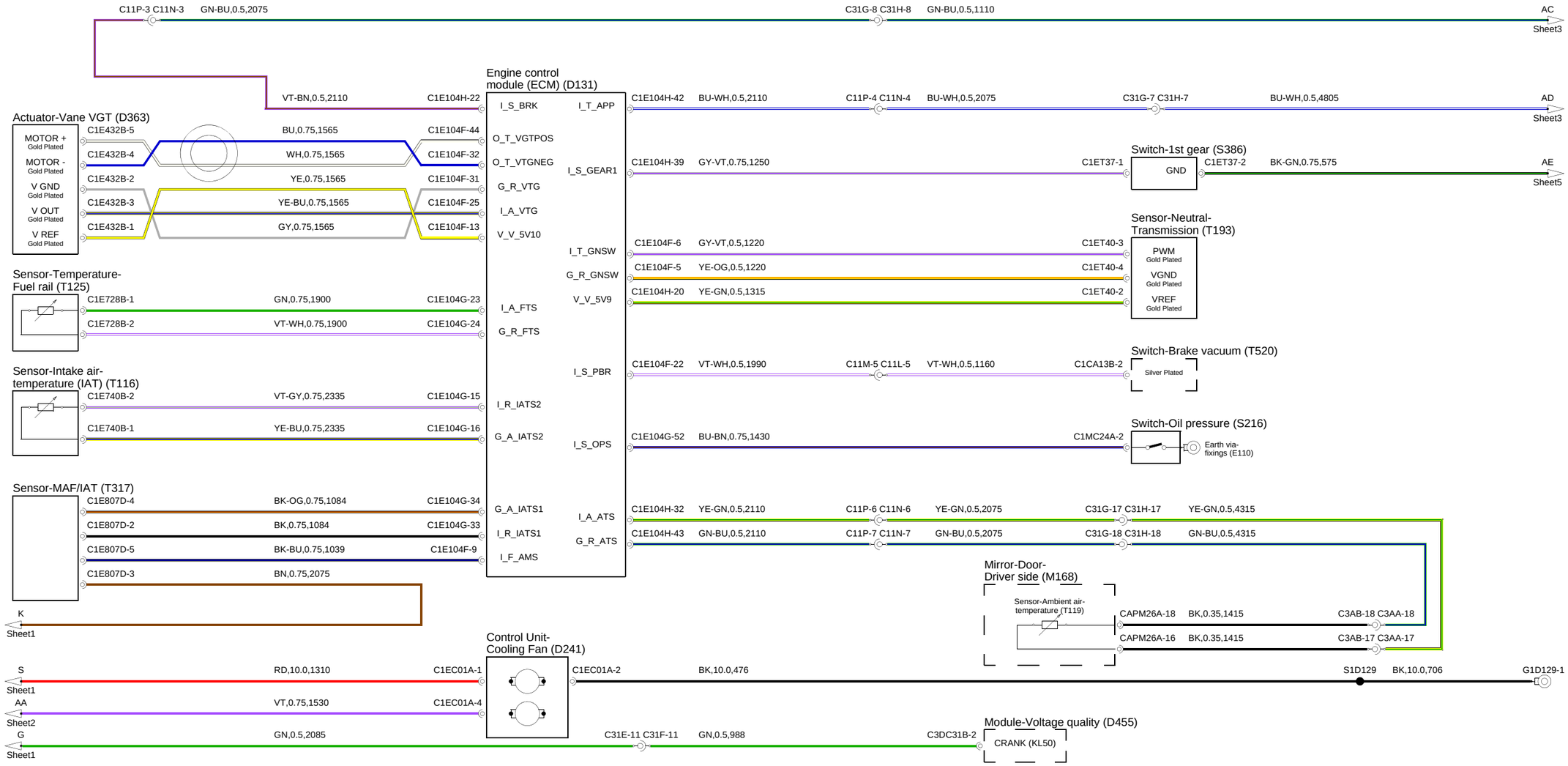
C11P-3 C11N-3 GN-BU,0.5,2075
C31G-8 C31H-8 GN-BU,0.5,1110
AC
Sheet3
Engine control module (ECM) (D131)
VT-BN,0.5,2110
C1E104H-22
I_S_BRK
I_T_APP
C1E104H-42 BU-WH,0.5,2110
C11P-4 C11N-4 BU-WH,0.5,2075
C31G-7 C31H-7 BU-WH,0.5,4805
AD
Sheet3
Actuator-Vane VGT (D363)
MOTOR + Gold Plated
MOTOR - Gold Plated
V GND Gold Plated
V OUT Gold Plated
V REF Gold Plated
C1E432B-5 BU,0.75,1565 C1E104F-44
O_T_VGTPOS
C1E432B-4 WH,0.75,1565 C1E104F-32
O_T_VTGNEG
C1E432B-2 YE,0.75,1565 C1E104F-31
G_R_VTG
C1E432B-3 YE-BU,0.75,1565 C1E104F-25
I_A_VTG
C1E432B-1 GY,0.75,1565 C1E104F-13
V_V_5V10
Switch-1st gear (S386)
I_S_GEAR1
C1E104H-39 GY-VT,0.75,1250
C1ET37-1
GND
C1ET37-2 BK-GN,0.75,575
AE
Sheet5
Sensor-Neutral-Transmission (T193)
I_T_GNSW
C1E104F-6 GY-VT,0.5,1220
C1ET40-3
PWM Gold Plated
G_R_GNSW
C1E104F-5 YE-OG,0.5,1220
C1ET40-4
VGND Gold Plated
V_V_5V9
C1E104H-20 YE-GN,0.5,1315
C1ET40-2
VREF Gold Plated
Sensor-Temperature-Fuel rail (T125)
C1E728B-1 GN,0.75,1900 C1E104G-23
I_A_FTS
C1E728B-2 VT-WH,0.75,1900 C1E104G-24
G_R_FTS
Switch-Brake vacuum (T520)
I_S_PBR
C1E104F-22 VT-WH,0.5,1990
C11M-5 C11L-5 VT-WH,0.5,1160
C1CA13B-2
Silver Plated
Sensor-Intake air-temperature (IAT) (T116)
C1E740B-2 VT-GY,0.75,2335 C1E104G-15
I_R_IATS2
C1E740B-1 YE-BU,0.75,2335 C1E104G-16
G_A_IATS2
Switch-Oil pressure (S216)
I_S_OPS
C1E104G-52 BU-BN,0.75,1430
C1MC24A-2
Earth via-fixings (E110)
Sensor-MAF/IAT (T317)
C1E807D-4 BK-OG,0.75,1084 C1E104G-34
G_A_IATS1
I_A_ATS
C1E104H-32 YE-GN,0.5,2110
C11P-6 C11N-6 YE-GN,0.5,2075
C31G-17 C31H-17 YE-GN,0.5,4315
C1E807D-2 BK,0.75,1084 C1E104G-33
I_R_IATS1
G_R_ATS
C1E104H-43 GN-BU,0.5,2110
C11P-7 C11N-7 GN-BU,0.5,2075
C31G-18 C31H-18 GN-BU,0.5,4315
C1E807D-5 BK-BU,0.75,1039 C1E104F-9
I_F_AMS
C1E807D-3 BN,0.75,2075
K
Sheet1
Mirror-Door-Driver side (M168)
Sensor-Ambient air-temperature (T119)
CAPM26A-18 BK,0.35,1415
C3AB-18 C3AA-18
CAPM26A-16 BK,0.35,1415
C3AB-17 C3AA-17
Control Unit-Cooling Fan (D241)
S
Sheet1
RD,10.0,1310
C1EC01A-1
C1EC01A-2 BK,10.0,476
S1D129 BK,10.0,706
G1D129-1
AA
Sheet2
VT,0.75,1530
C1EC01A-4
Module-Voltage quality (D455)
G
Sheet1
GN,0.5,2085
C31E-11 C31F-11 GN,0.5,988
C3DC31B-2
CRANK (KL50)

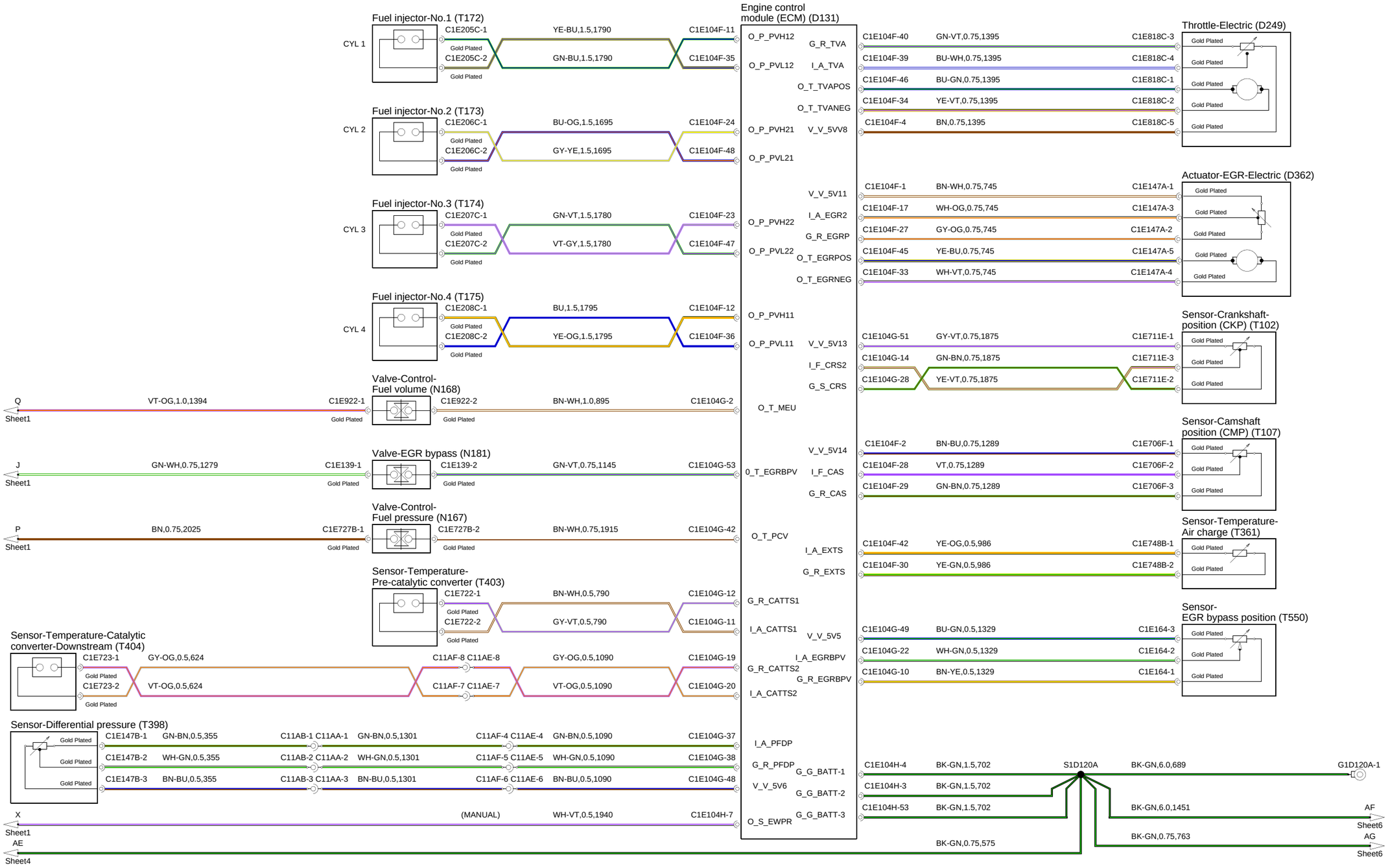
Engine control module (ECM) (D131)
Fuel injector-No.1 (T172)
CYL 1
C1E205C-1
YE-BU,1.5,1790
C1E104F-11
C1E205C-2
GN-BU,1.5,1790
C1E104F-35
Fuel injector-No.2 (T173)
CYL 2
C1E206C-1
BU-OG,1.5,1695
C1E104F-24
C1E206C-2
GY-YE,1.5,1695
C1E104F-48
Fuel injector-No.3 (T174)
CYL 3
C1E207C-1
GN-VT,1.5,1780
C1E104F-23
C1E207C-2
VT-GY,1.5,1780
C1E104F-47
Fuel injector-No.4 (T175)
CYL 4
C1E208C-1
BU,1.5,1795
C1E104F-12
C1E208C-2
YE-OG,1.5,1795
C1E104F-36
Valve-Control-Fuel volume (N168)
Q
Sheet1
VT-OG,1.0,1394
C1E922-1
C1E922-2
BN-WH,1.0,895
C1E104G-2
Valve-EGR bypass (N181)
J
Sheet1
GN-WH,0.75,1279
C1E139-1
C1E139-2
GN-VT,0.75,1145
C1E104G-53
Valve-Control-Fuel pressure (N167)
P
Sheet1
BN,0.75,2025
C1E727B-1
C1E727B-2
BN-WH,0.75,1915
C1E104G-42
Sensor-Temperature-Pre-catalytic converter (T403)
C1E722-1
BN-WH,0.5,790
C1E104G-12
C1E722-2
GY-VT,0.5,790
C1E104G-11
Sensor-Temperature-Catalytic converter-Downstream (T404)
C1E723-1
GY-OG,0.5,624
C11AF-8 C11AE-8
GY-OG,0.5,1090
C1E104G-19
C1E723-2
VT-OG,0.5,624
C11AF-7 C11AE-7
VT-OG,0.5,1090
C1E104G-20
Sensor-Differential pressure (T398)
C1E147B-1
GN-BN,0.5,355
C11AB-1 C11AA-1
GN-BN,0.5,1301
C11AF-4 C11AE-4
GN-BN,0.5,1090
C1E104G-37
C1E147B-2
WH-GN,0.5,355
C11AB-2 C11AA-2
WH-GN,0.5,1301
C11AF-5 C11AE-5
WH-GN,0.5,1090
C1E104G-38
C1E147B-3
BN-BU,0.5,355
C11AB-3 C11AA-3
BN-BU,0.5,1301
C11AF-6 C11AE-6
BN-BU,0.5,1090
C1E104G-48
X
Sheet1
(MANUAL)
WH-VT,0.5,1940
C1E104H-7
AE
Sheet4
O_P_PVH12
G_R_TVA
O_P_PVL12
I_A_TVA
O_T_TVAPOS
O_T_TVANEG
O_P_PVH21
V_V_5VV8
O_P_PVL21
V_V_5V11
I_A_EGR2
O_P_PVH22
G_R_EGRP
O_P_PVL22
O_T_EGRPOS
O_T_EGRNEG
O_P_PVH11
O_P_PVL11
V_V_5V13
I_F_CRS2
G_S_CRS
O_T_MEU
V_V_5V14
0_T_EGRBPV
I_F_CAS
G_R_CAS
O_T_PCV
I_A_EXTS
G_R_EXTS
G_R_CATTS1
I_A_CATTS1
V_V_5V5
I_A_EGRBPV
G_R_CATTS2
G_R_EGRBPV
I_A_CATTS2
I_A_PFDP
G_R_PFDP
G_G_BATT-1
V_V_5V6
G_G_BATT-2
G_G_BATT-3
O_S_EWPR
C1E104F-40
GN-VT,0.75,1395
C1E818C-3
C1E104F-39
BU-WH,0.75,1395
C1E818C-4
C1E104F-46
BU-GN,0.75,1395
C1E818C-1
C1E104F-34
YE-VT,0.75,1395
C1E818C-2
C1E104F-4
BN,0.75,1395
C1E818C-5
Throttle-Electric (D249)
Gold Plated
C1E104F-1
BN-WH,0.75,745
C1E147A-1
C1E104F-17
WH-OG,0.75,745
C1E147A-3
C1E104F-27
GY-OG,0.75,745
C1E147A-2
C1E104F-45
YE-BU,0.75,745
C1E147A-5
C1E104F-33
WH-VT,0.75,745
C1E147A-4
Actuator-EGR-Electric (D362)
C1E104G-51
GY-VT,0.75,1875
C1E711E-1
C1E104G-14
GN-BN,0.75,1875
C1E711E-3
C1E104G-28
YE-VT,0.75,1875
C1E711E-2
Sensor-Crankshaft-position (CKP) (T102)
C1E104F-2
BN-BU,0.75,1289
C1E706F-1
C1E104F-28
VT,0.75,1289
C1E706F-2
C1E104F-29
GN-BN,0.75,1289
C1E706F-3
Sensor-Camshaft position (CMP) (T107)
C1E104F-42
YE-OG,0.5,986
C1E748B-1
C1E104F-30
YE-GN,0.5,986
C1E748B-2
Sensor-Temperature-Air charge (T361)
C1E104G-49
BU-GN,0.5,1329
C1E164-3
C1E104G-22
WH-GN,0.5,1329
C1E164-2
C1E104G-10
BN-YE,0.5,1329
C1E164-1
Sensor-EGR bypass position (T550)
C1E104H-4
BK-GN,1.5,702
S1D120A
BK-GN,6.0,689
G1D120A-1
C1E104H-3
BK-GN,1.5,702
C1E104H-53
BK-GN,1.5,702
BK-GN,6.0,1451
AF
Sheet6
BK-GN,0.75,763
AG
Sheet6
BK-GN,0.75,575

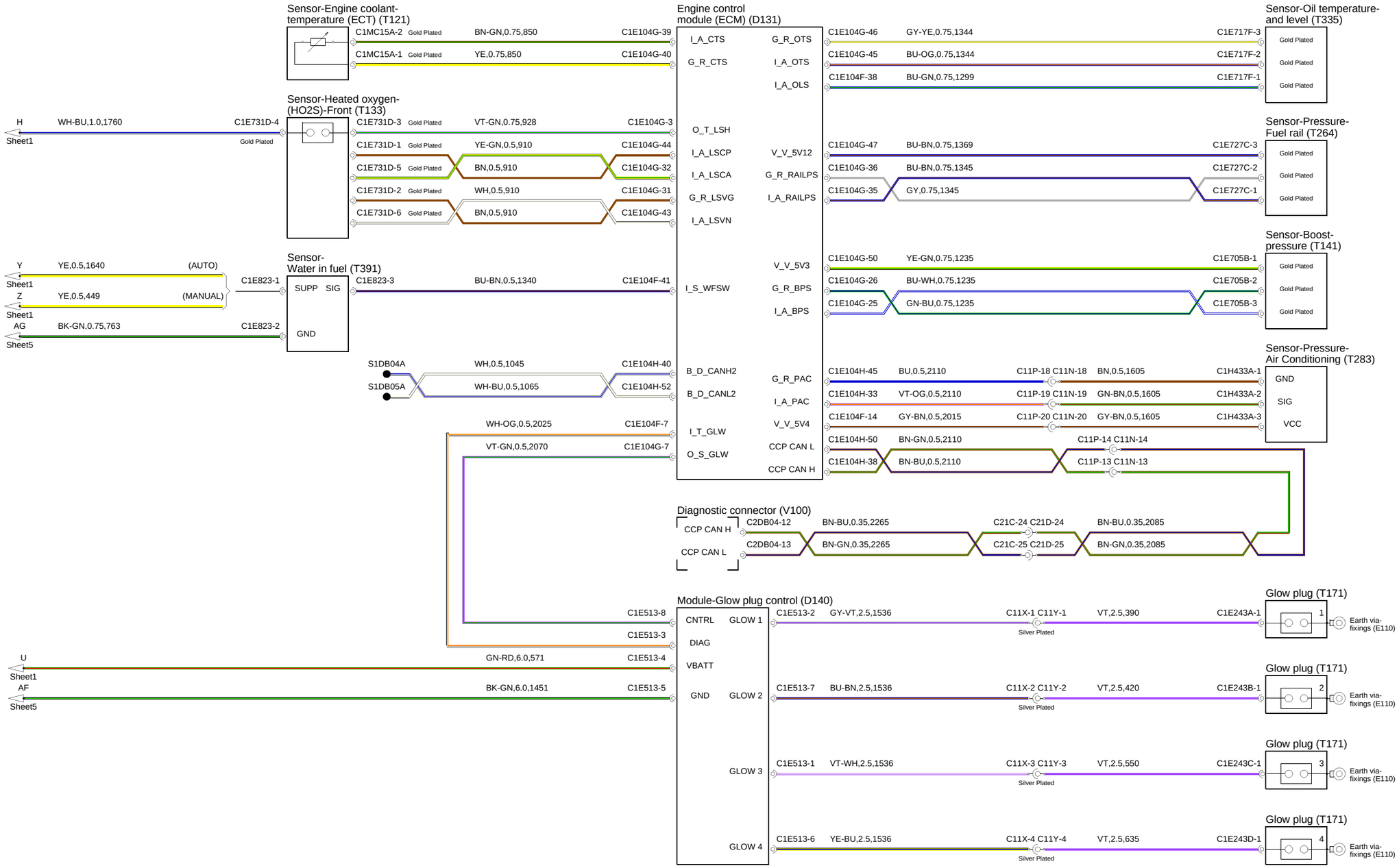
Sensor-Engine coolant-temperature (ECT) (T121)
C1MC15A-2 Gold Plated BN-GN,0.75,850 C1E104G-39
C1MC15A-1 Gold Plated YE,0.75,850 C1E104G-40
Engine control module (ECM) (D131)
I_A_CTS
G_R_CTS
G_R_OTS
I_A_OTS
I_A_OLS
C1E104G-46 GY-YE,0.75,1344 C1E717F-3
C1E104G-45 BU-OG,0.75,1344 C1E717F-2
C1E104F-38 BU-GN,0.75,1299 C1E717F-1
Sensor-Oil temperature-and level (T335)
Gold Plated
Sensor-Heated oxygen-(HO2S)-Front (T133)
H WH-BU,1.0,1760 C1E731D-4
Sheet1
Gold Plated
C1E731D-3 Gold Plated VT-GN,0.75,928 C1E104G-3
C1E731D-1 Gold Plated YE-GN,0.5,910 C1E104G-44
C1E731D-5 Gold Plated BN,0.5,910 C1E104G-32
C1E731D-2 Gold Plated WH,0.5,910 C1E104G-31
C1E731D-6 Gold Plated BN,0.5,910 C1E104G-43
O_T_LSH
I_A_LSCP
I_A_LSCA
G_R_LSVG
I_A_LSVN
V_V_5V12
G_R_RAILPS
I_A_RAILPS
C1E104G-47 BU-BN,0.75,1369 C1E727C-3
C1E104G-36 BU-BN,0.75,1345 C1E727C-2
C1E104G-35 GY,0.75,1345 C1E727C-1
Sensor-Pressure-Fuel rail (T264)
Sensor-Boost-pressure (T141)
Sensor-Water in fuel (T391)
Y YE,0.5,1640 (AUTO)
Sheet1
Z YE,0.5,449 (MANUAL)
Sheet1
AG BK-GN,0.75,763 C1E823-2
Sheet5
C1E823-1
SUPP SIG
GND
C1E823-3 BU-BN,0.5,1340 C1E104F-41
I_S_WFSW
V_V_5V3
G_R_BPS
I_A_BPS
C1E104G-50 YE-GN,0.75,1235 C1E705B-1
C1E104G-26 BU-WH,0.75,1235 C1E705B-2
C1E104G-25 GN-BU,0.75,1235 C1E705B-3
S1DB04A WH,0.5,1045 C1E104H-40
S1DB05A WH-BU,0.5,1065 C1E104H-52
B_D_CANH2
B_D_CANL2
G_R_PAC
I_A_PAC
V_V_5V4
CCP CAN L
CCP CAN H
C1E104H-45 BU,0.5,2110 C11P-18 C11N-18 BN,0.5,1605 C1H433A-1
C1E104H-33 VT-OG,0.5,2110 C11P-19 C11N-19 GN-BN,0.5,1605 C1H433A-2
C1E104F-14 GY-BN,0.5,2015 C11P-20 C11N-20 GY-BN,0.5,1605 C1H433A-3
C1E104H-50 BN-GN,0.5,2110 C11P-14 C11N-14
C1E104H-38 BN-BU,0.5,2110 C11P-13 C11N-13
Sensor-Pressure-Air Conditioning (T283)
GND
SIG
VCC
WH-OG,0.5,2025 C1E104F-7
VT-GN,0.5,2070 C1E104G-7
I_T_GLW
O_S_GLW
Diagnostic connector (V100)
CCP CAN H
CCP CAN L
C2DB04-12 BN-BU,0.35,2265 C21C-24 C21D-24 BN-BU,0.35,2085
C2DB04-13 BN-GN,0.35,2265 C21C-25 C21D-25 BN-GN,0.35,2085
Module-Glow plug control (D140)
C1E513-8
C1E513-3
C1E513-4
C1E513-5
CNTRL
DIAG
VBATT
GND
GLOW 1
GLOW 2
GLOW 3
GLOW 4
U
Sheet1
AF
Sheet5
GN-RD,6.0,571
BK-GN,6.0,1451
C1E513-2 GY-VT,2.5,1536 C11X-1 C11Y-1 VT,2.5,390 C1E243A-1
C1E513-7 BU-BN,2.5,1536 C11X-2 C11Y-2 VT,2.5,420 C1E243B-1
C1E513-1 VT-WH,2.5,1536 C11X-3 C11Y-3 VT,2.5,550 C1E243C-1
C1E513-6 YE-BU,2.5,1536 C11X-4 C11Y-4 VT,2.5,635 C1E243D-1
Silver Plated
Glow plug (T171)
Earth via-fixings (E110)